PDCU Pure DC® Universal Power Supply - Installation Instructions

Models PDCU-W-3x96-24

Please read all instructions prior to installation and keep for future reference!

This power supply is to be installed in accordance with Article 450 of the National Electrical Code. The power supply must be installed in a well ventilated area and free from explosive gases and vapors. Proper operation requires the free flow of air. As this power supply is hardwired, it should only be installed by a qualified electrician. UL class 2 recognized

c UL us LISTED

luminii
7777 Merrimac Ave
Niles, IL 60714
T 224.333.6033
F 224.757.7557
info@luminii.com
www.luminii.com

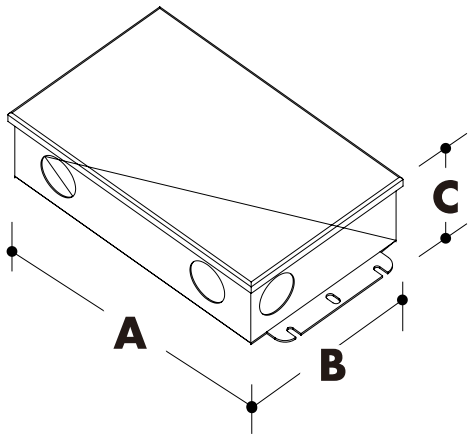

MODELS	PDCU-W-3x96-24
MAX Load	3x 96 watts
A. Length	11.85"
B . Width	4.32"
C . Depth	1.81"
Net Weight	5.2 lbs

1

Before installing, check the label and ensure the power supply has the proper input voltage, output voltage, and wattage for the job. Check the wire markings to ensure they match the wiring diagram below. Refer to table above for the maximum loads!

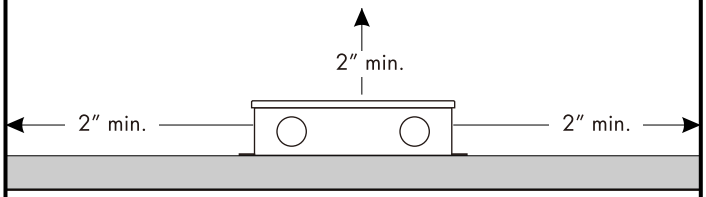

1.1 Power supply can be mounted vertically or horizontally. With a minimum of 2" clearance around power supply to provide proper air circulation.

2

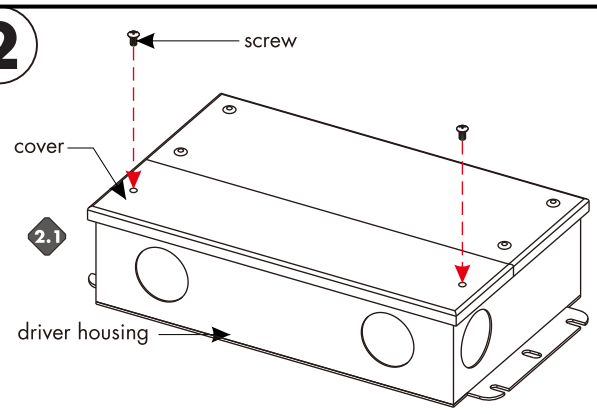

2.1 Remove the two Phillips screws from the top of the driver housing and pull the cover off to expose the driver wires.

3

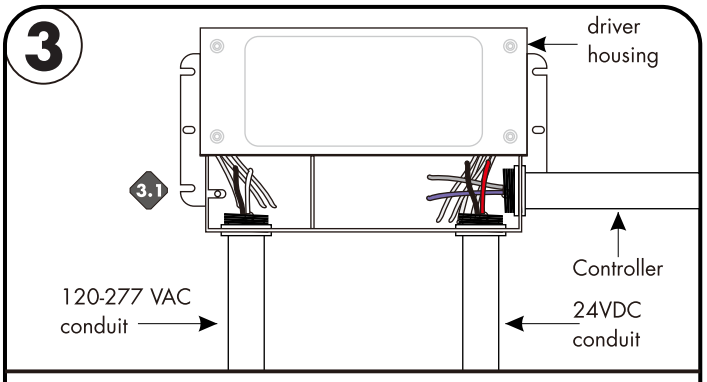

3.1 Insert the 120-277 VAC power into the driver housing from the electrical panel. Followed by bringing the 24V DC low voltage wires from the LEDs into the driver housing. In addition bring the controller wire if applicable. Refer to diagram on page 2 to make all the proper wiring connections.

*LUMINII RESERVES THE RIGHTS TO CHANGE SPECIFICATION & INSTRUCTION WITHOUT NOTICE

PDCU Pure DC® Universal Power Supply - Installation Instructions

Models PDCU-W-3x96-24

Please read all instructions prior to installation and keep for future reference!

This power supply is to be installed in accordance with Article 450 of the National Electrical Code. The power supply must be installed in a well ventilated area and free from explosive gases and vapors. Proper operation requires the free flow of air. As this power supply is hardwired, it should only be installed by a qualified electrician. UL class 2 recognized

c UL us LISTED

luminii
7777 Merrimac Ave
Niles, IL 60714
T 224.333.6033
F 224.757.7557
info@luminii.com
www.luminii.com

4 WIRING DIAGRAM

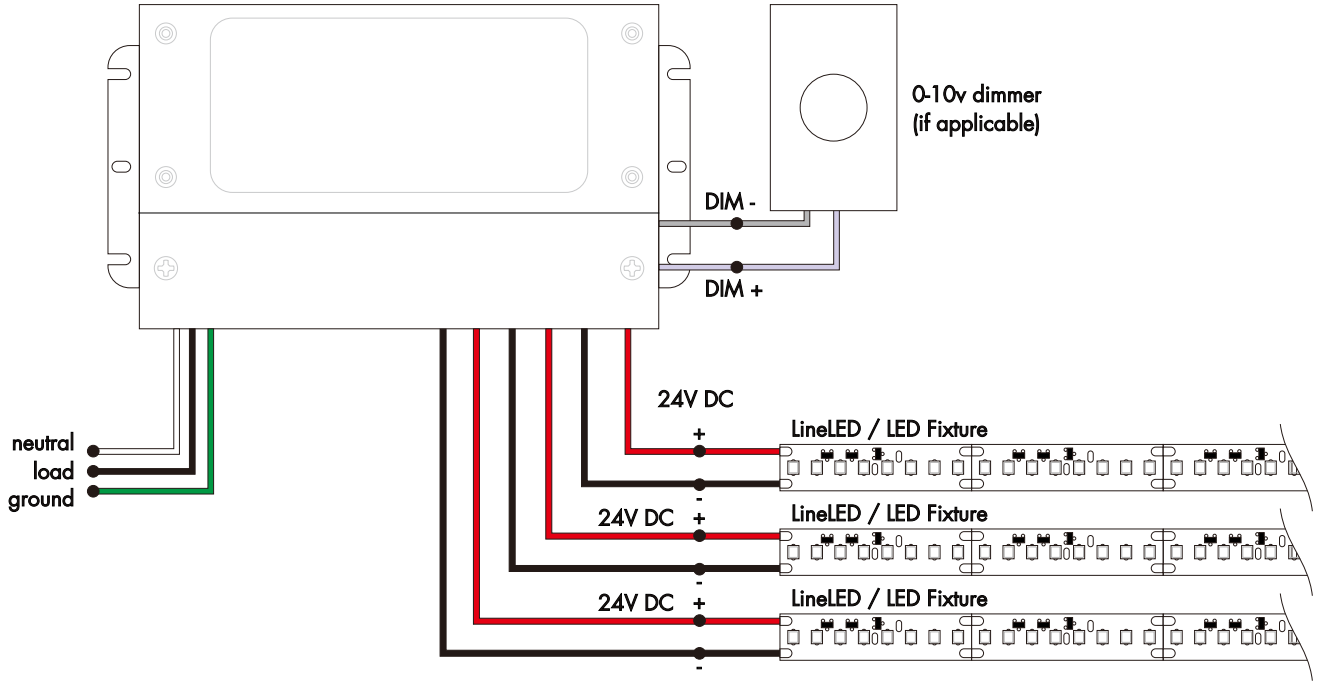

5

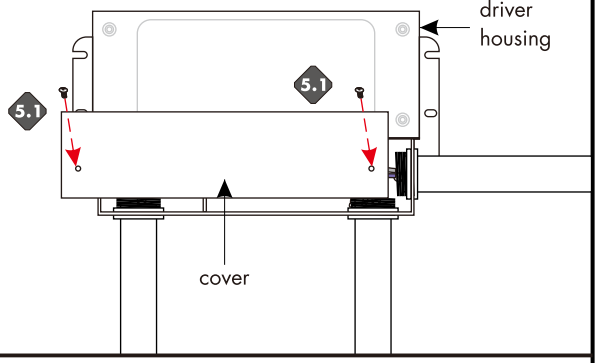

5.1 Insert the wire nut connections in the driver housing and close housing cover. Secure by tightening the two screws.

*LUMINII RESERVES THE RIGHTS TO CHANGE SPECIFICATION & INSTRUCTION WITHOUT NOTICE